Superscalar Organization

Instructor: Nima Honarmand

Instruction-Level Parallelism (ILP)

- Recall: "Parallelism is the number of independent tasks available"
- ILP is a measure of inter-dependencies between insns.
- Average ILP = num. instruction / num. cyc required

code1: ILP = 1

i.e. must execute serially

code2: ILP = 3

i.e. can execute at the same time

```
code1:   r1 ← r2 + 1
         r3 ← r1 / 17
         r4 ← r0 - r3
```

```
code2:   r1 ← r2 + 1
         r3 ← r9 / 17
         r4 ← r0 - r10
```

ILP != IPC

- ILP usually assumes
  - Infinite resources
  - Perfect fetch
  - Unit-latency for all instructions
- ILP is a property of the program dataflow
- IPC is the "real" observed metric
  - How many insns. are executed per cycle
- ILP is an upper-bound on the attainable IPC
  - Specific to a particular program

Purported Limits on ILP

Weiss and Smith [1984]	1.58
Sohi and Vajapeyam [1987]	1.81
Tjaden and Flynn [1970]	1.86
Tjaden and Flynn [1973]	1.96
Uht [1986]	2.00
Smith et al. [1989]	2.00
Jouppi and Wall [1988]	2.40
Johnson [1991]	2.50
Acosta et al. [1986]	2.79
Wedig [1982]	3.00
Butler et al. [1991]	5.8
Melvin and Patt [1991]	6
Wall [1991]	7
Kuck et al. [1972]	8
Riseman and Foster [1972]	51
Nicolau and Fisher [1984]	90

ILP Limits of Scalar Pipelines (1)

- Scalar upper bound on throughput
  - Limited to CPI >= 1
  - Solution: **superscalar** pipelines with multiple insns at each stage

Pentium Pipeline

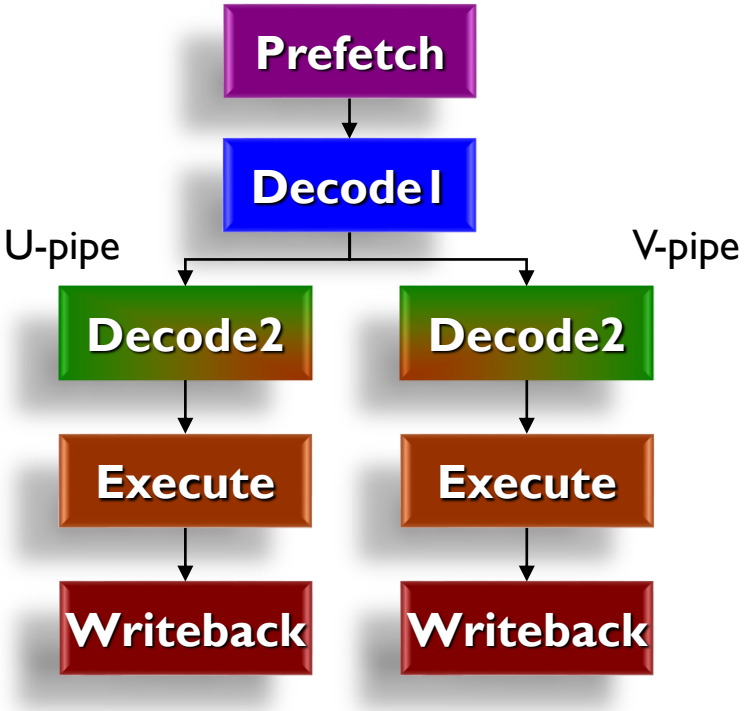

ILP Limits of Scalar Pipelines (2)

- Inefficient unified pipeline
  - Lower resource utilization and longer instruction latency
  - Solution: **diversified** pipelines

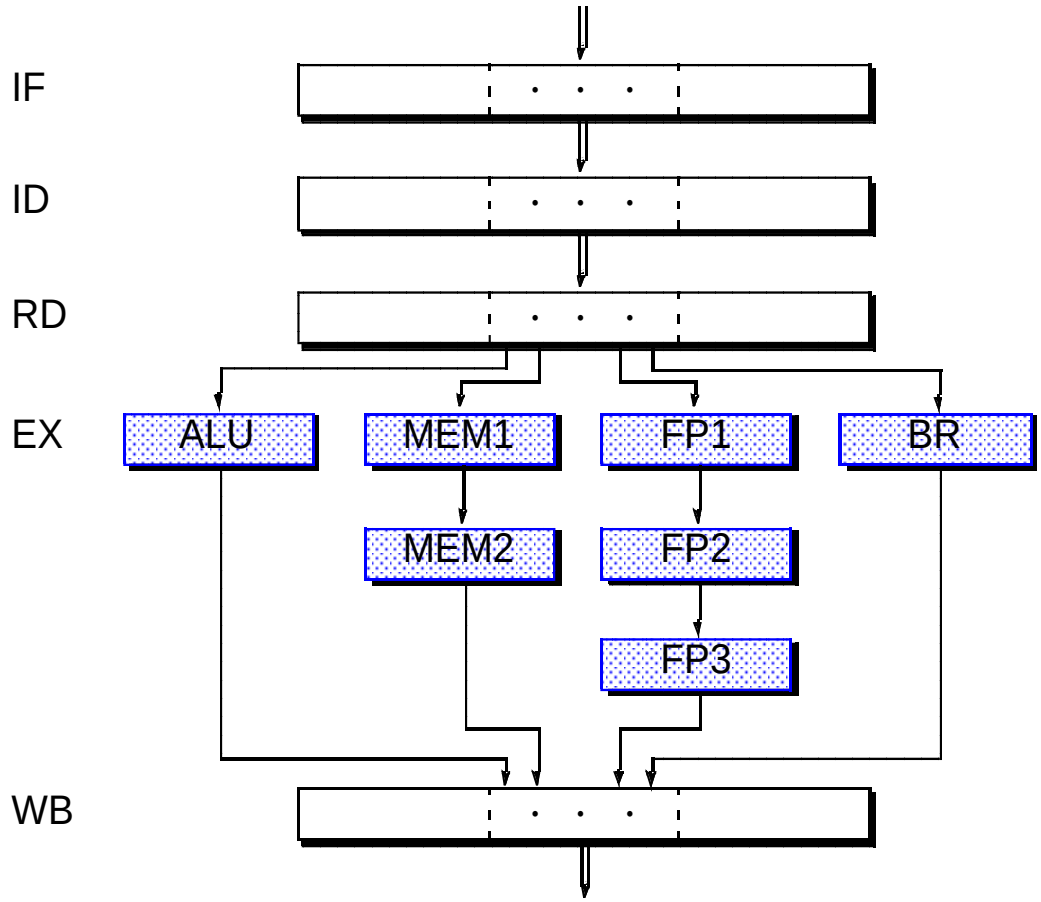

ILP Limits of Scalar Pipelines (3)

- Rigid pipeline stall policy
  - A stalled instruction stalls all newer instructions
  - Solution 1: **out-of-order** execution

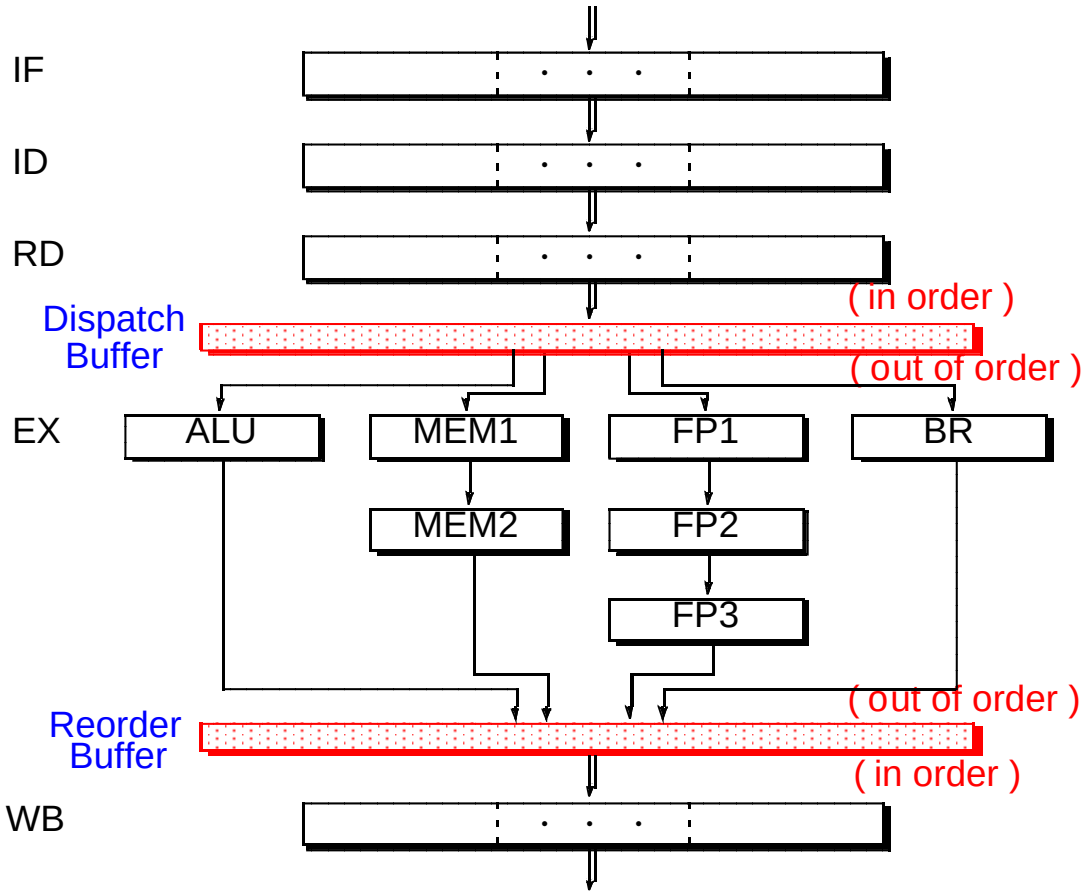

ILP Limits of Scalar Pipelines (3)

- Rigid pipeline stall policy
  - A stalled instruction stalls all newer instructions
  - Solution 1: **out-of-order** execution
  - Solution 2: **inter-stage buffers**

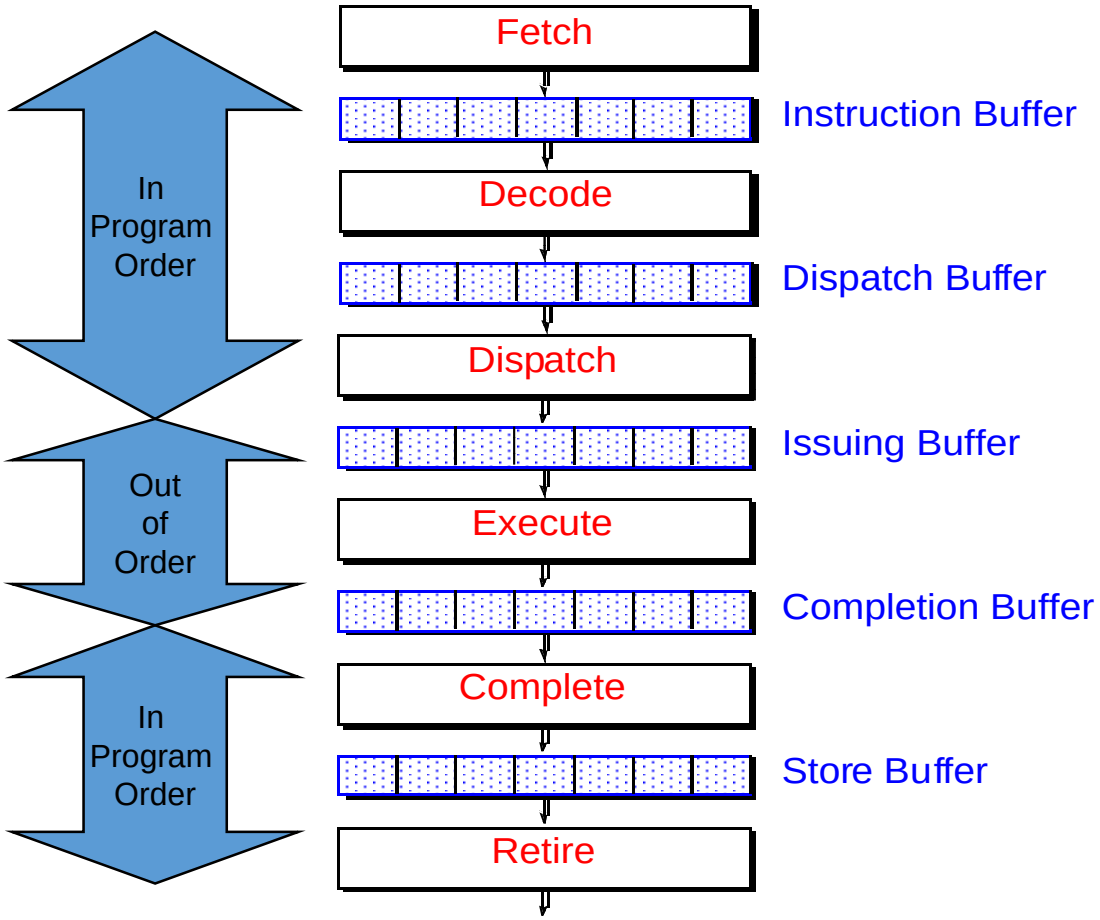

ILP Limits of Scalar Pipelines (4)

- Instruction dependencies limit parallelism
  - Frequent stalls due to data and control dependencies
  - Solution 1: **renaming** – for WAR and WAW register dependences
  - Solution 2: **speculation** – for control dependences and memory dependences

ILP Limits of Scalar Pipelines (Summary)

1. Scalar upper bound on throughput
   - Limited to CPI >= 1
   - Solution: **superscalar** pipelines with multiple insns at each stage
2. Inefficient unified pipeline
   - Lower resource utilization and longer instruction latency
   - Solution: **diversified** pipelines
3. Rigid pipeline stall policy
   - A stalled instruction stalls all newer instructions
   - Solution: **out-of-order** execution and **inter-stage buffers**
4. Instruction dependencies limit parallelism
   - Frequent stalls due to data and control dependencies
   - Solutions: **renaming** and **speculation**

State of the art: ***Out-of-Order Superscalar Pipelines***

Overall Picture

- Fetch issues:
  - Fetch multiple isns
  - Branches
  - Branch target mis-alignment
- Decode issues:
  - Identify insns
  - Find dependences
- Execution issues:
  - Dispatch insns
  - Resolve dependences
  - Bypass networks
  - Multiple outstanding memory accesses
- Completion issues:
  - Out-of-order completion
  - Speculative instructions
  - Precise exceptions